DS-2CD2327G3E-L
2 MP ColorVu Fixed Turret Network Camera

Key Features

- Max. 1920 × 1080 @25fps
- 4 mm/6 mm fixed lens
- H.265+, H.264+
- 120dB WDR
- 0.0035 @ F1.0 (1/30 s, AGC ON), 0.005 @ F1.2 (1/30 s, AGC ON), 0 Lux with LED on
- 12 VDC & PoE (802.3af, class 3)
- Built-in micro SD/SDHC/SDXC slot, up to 128G
- IP67
- BLC/3D DNR/HLC/ROI
- 24-hour colorful video

Specification

Camera	
Image Sensor	1/2.8" Progressive Scan CMOS
Min. Illumination	0.0035 @ F1.0 (1/30 s, AGC ON), 0.005 @ F1.2 (1/30 s, AGC ON), 0 Lux with LED on
Shutter Speed	1/3 s to 1/100,000 s
Slow Shutter	Yes
Focal length	4/6 mm
Focus	Fixed
Aperture	F1.0
FOV	4 mm, horizontal FOV: 89°, vertical FOV: 47°, diagonal FOV: 106° 6 mm, horizontal FOV: 56°, vertical FOV: 30°, diagonal FOV: 65°
Lens Mount	M16
Auto-Iris	No
DNR	3D DNR
Wide Dynamic Range	120dB
3-Axis Adjustment	Pan: 0° to 355°, tilt: 0° to 75°, rotate: 0° to 355°
Compression Standard	
Video Compression	Main stream: H.265/H.264 Sub stream: H.265/H.264/MJPEG Third stream: H.265/H.264
H.264 Type	Baseline Profile/Main Profile/High Profile
H.264+	Main stream supports
H.265 Type	Main Profile
H.265+	Main stream supports
Video Bit Rate	32 Kbps to 8 Mbps
Image	
Max. Resolution	1920 × 1080
Main Stream	50Hz: 25fps (1920 × 1080, 1280 × 960, 1280 × 720) 60Hz: 30fps (1920 × 1080, 1280 × 960, 1280 × 720)
Sub Stream	50Hz: 25fps (640 × 480, 640 × 360, 320 × 240) 60Hz: 30fps (640 × 480, 640 × 360, 320 × 240)
Third stream	50Hz: 1fps (1280 × 720, 640 × 480, 640 × 360, 352 × 240, 320 × 240) 60Hz: 1fps (1280 × 720, 640 × 480, 640 × 360, 352 × 240, 320 × 240)
Image Enhancement	BLC/3D DNR/HLC
Image Settings	Rotate mode, saturation, brightness, contrast, sharpness, AGC, white balance adjustable by client software or web browser
ROI (Region of Interest)	Support 1 fixed region for main stream
Network	
Network Storage	Support micro SD/SDHC/SDXC card (128G) local storage, NAS (NFS,SMB/CIFS), ANR
Alarm Trigger	Motion detection, video tampering detection, network disconnected, IP address conflict, illegal login, HDD full, HDD error
Protocols	TCP/IP, ICMP, HTTP, HTTPS, FTP, DHCP, DNS, DDNS, RTP, RTSP, RTCP, PPPoE, NTP, UPnP, SMTP, SNMP, IGMP, 802.1X, QoS, IPv6, UDP, Bonjour
General Function	One-key reset, three streams, heartbeat, mirror, password protection, privacy mask, watermark, IP address filter
Firmware Version	V5.5.53

API	ONVIF (PROFILE S, PROFILE G), ISAPI
Simultaneous Live View	Up to 6 channels
User/Host	Up to 32 users 3 levels: Administrator, Operator and User
Client	iVMS-4200, Hik-Connect, iVMS-4500, iVMS-5200
Web Browser	IE8+, Chrome 31.0-44, Firefox 30.0-51, Safari 8.0+
Interface	
Communication Interface	1 RJ45 10M/100M self-adaptive Ethernet port
On-board Storage	Built-in micro SD/SDHC/SDXC slot, up to 128 GB
Reset Button	Yes
SVC	H.265 encoding and H.264 encoding support
Smart Feature-set	
Behavior Analysis	Line crossing detection, intrusion detection
General	
Operating Conditions	-30 °C to +60 °C (-22 °F to +140 °F), humidity 95% or less (non-condensing)
Power Supply	12 VDC ± 25%, 5.5 mm coaxial power plug PoE (802.3af, class 3)
Power Consumption	12 VDC, 0.5 A, max: 5 W PoE: (802.3af, 36 V to 57 V), 0.2 A to 0.1 A, max: 6.5 W
Visible Light Range	Warm white LEDs (3000K), up to 30m
Protection Level	IP67
Material	Camera body: Front cover: plastic, back cover: metal Bottom base: plastic
Dimensions	Camera: Φ130 × 103.6 mm (Φ5.1” × 4.1”)
Weight	Camera: 500 g (1.1 lb.)

Available Models

DS-2CD2327G3E-L (4/6 mm)

Dimensions

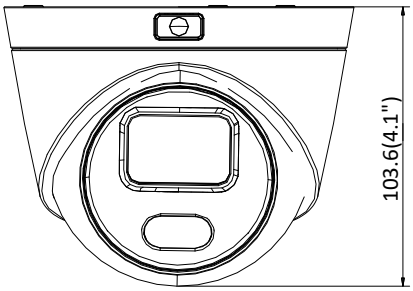

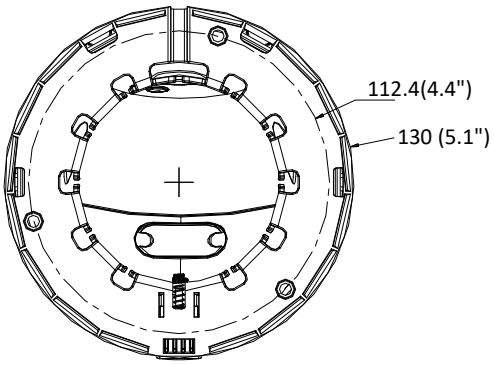

Unit: mm

Accessories

DS-1273ZJ-130-TRL

Wall mount

DS-1271ZJ-130-TRL

Pendant mount

DS-1275ZJ

Vertical pole mount

DS-1276ZJ

Corner mount

DS-1280ZJ-M

Junction box

DS-1281ZJ-M

Inclined ceiling mount

Distributed by

Headquarters
No.555 Qianmo Road, Binjiang District,
Hangzhou 310051, China
T +86-571-8807-5998
overseasbusiness@hikvision.com

Hikvision USA
T +1-909-895-0400
sales.usa@hikvision.com

Hikvision Europe
T +31-23-5542770
sales.eu@hikvision.com

Hikvision UK & Ireland
T +01628-902140
sales.uk@hikvision.com

Hikvision UAE
T +971-4-4432090
salesme@hikvision.com

Hikvision Russia
T +7-495-669-67-99
saleru@hikvision.com

Hikvision Australia
T +61-2-8599-4233
salesau@hikvision.com

Hikvision Italy
T +39-0438-6902
info.it@hikvision.com

Hikvision South Africa
Tel: +27 (10) 0351172
sale.africa@hikvision.com

Hikvision Singapore
T +65-6684-4718
sg@hikvision.com

Hikvision Korea
T +82-(0)31-731-8817
sales.korea@hikvision.com

Hikvision India
T +91-22-28469900
sales@pramahikvision.com

Hikvision Brazil
T +55 11 3318-0050
Latam.support@hikvision.com

Hikvision France
T +33(0)1-85-330-450
info.fr@hikvision.com

Hikvision Spain
T +34-91-737-16-55
info.es@hikvision.com

Hikvision Poland
T +48-22-460-01-50
info.pl@hikvision.com

Hikvision Canada
T +1-866-200-6690
sales.canada@hikvision.com

Hikvision Turkey
T +90 (216)521 7070- 7074
sales.tr@hikvision.com

Hikvision Kazakhstan
T +7-727-9730667
nikia.panfilov@hikvision.ru

Hikvision Tashkent
T +99-87-1238-9438
uzb@hikvision.ru

Hikvision Indonesia
T +62-21-2933759
Sales.Indonesia@hikvision.com

Hikvision Thailand
T +662-275-9949
sales.thailand@hikvision.com

Hikvision Malaysia
T +601-7652-2413
sales.my@hikvision.com

Hikvision Vietnam
T +84-974270888
sales.vt@hikvision.com

Hikvision Hong Kong
T +852-2151-1761
info.hk@hikvision.com

Hikvision Colombia
sales.colombia@hikvision.com

© Hikvision Digital Technology Co., Ltd. 2018 | Data subject to change without notice |

05055320180913