DS-2CD2125FWD-I(S)
2 MP IR Fixed Dome Network Camera

Key Features

- Up to 2.0 megapixel high resolution
- Max. 1920 × 1080 @30fps
- 2.8 mm/4 mm/6 mm/8 mm/12 mm fixed lens, optional
- Powered by Darkfighter
- H.265, H.265+, H.264+, H.264
- 120dB Wide Dynamic Range
- 3D Digital Noise Reduction
- 12 VDC & PoE (802.3af)
- IR range: up to 30 m
- Support on-board storage, up to 128 GB
- Audio I/O, Alarm I/O, optional
- IP67, IK10
- 3-axis adjustment
- Color: 0.005 Lux @ (F1.2, AGC ON), 0 Lux with IR

  Color: 0.009 Lux @ (F1.6, AGC ON), 0 Lux with IR

Specification

Camera	
Image Sensor	1/2.8" Progressive Scan CMOS
Min. Illumination	Color: 0.005 Lux @ (F1.2, AGC ON), 0 Lux with IR Color: 0.009 Lux @ (F1.6, AGC ON), 0 Lux with IR
Shutter Speed	1/3 s to 1/100,000 s
Slow Shutter	Yes
Focal length	2.8/4/6/8/12 mm
Focus	Fixed
Lens	2.8 mm, horizontal field of view: 108° 4 mm, horizontal field of view: 86.4° 6 mm, horizontal field of view: 52° 8 mm, horizontal field of view: 41° 12 mm, horizontal field of view: 25°
Lens Mount	M12
Iris	F1.6
Day &Night	IR cut filter
DNR	3D DNR
Wide Dynamic Range	120dB
3-Axis Adjustment	Pan: 0° to 355° , tilt: 0° to 75°, rotate: 0° to 355°
Compression Standard	
Video Compression	Main stream: H.265/H.264 Sub-stream: H.265/H.264/MJPEG Third stream: H.265/H.264
H.264 Type	Main Profile/High Profile
H.264+	Main stream supports
H.265 Type	Main Profile
H.265+	Main stream supports
Video Bit Rate	32 Kbps to 16 Mbps
Audio Compression (-S)	G.711/G.722.1/G.726/MP2L2/PCM
Audio Bit Rate (-S)	64Kbps(G.711)/16Kbps(G.722.1)/16Kbps(G.726)/32-192Kbps(MP2L2)
Image	
Max. Resolution	1920 × 1080
Main Stream	50Hz: 25fps (1920 × 1080, 1280 × 960, 1280×720) 60Hz: 30fps (1920 × 1080, 1280 × 960, 1280×720)
Sub-Stream	50Hz: 25fps (640 × 480, 640 × 360, 320 × 240) 60Hz: 30fps (640 × 480, 640 × 360, 320 × 240)
Third Stream	50Hz: 25fps (1920 × 1080, 1280×720, 640 × 360, 352 × 288) 60Hz: 30fps (1920 × 1080, 1280×720, 640 × 360, 352 × 240)
Image Enhancement	BLC/3D DNR/HLC
Image Settings	Rotate mode, saturation, brightness, contrast, sharpness and white balance adjustable by client software or web browser
ROI (Region of Interest)	Support 1 fixed region for main stream and sub-stream separately
Day/Night Switch	Day/Night/Auto/Schedule/Triggered by Alarm In(-S)
Audio (-S)	

Environment Noise Filtering	Yes
Audio I/O	Yes, mono soundtrack
Sampling Rate	8kHz/16kHz/32kHz/44.1kHZ/48kHz
Network	
Network Storage	Support microSD/SDHC/SDXC card (128G) local storage, NAS (NFS,SMB/CIFS), ANR
Alarm Trigger	Motion Detection, Tampering Alarm, Network Disconnected, IP Address Conflict, Illegal Login, HDD full, HDD error
Protocols	TCP/IP, UDP, ICMP, HTTP, HTTPS, FTP, DHCP, DNS, DDNS, RTP, RTSP, RTCP, PPPoE, NTP, UPnP, SMTP, SNMP, IGMP, 802.1X, QoS, IPv6
Standard	ONVIF (PROFILE S, PROFILE G), ISAPI
General Function	One-key Reset, Anti-Flicker, Heartbeat, Mirror, Password Protection, Privacy Mask, Watermark, IP Address Filter
Firmware Version	V5.5.80
API	ONVIF (PROFILE S, PROFILE G), ISAPI
Simultaneous Live View	Up to 6 channels
User/Host	Up to 32 users 3 levels: Administrator, Operator and User
Client	iVMS-4200, Hik-Connect, iVMS-5200, iVMS-4500
Web Browser	Plug-in required live view: IE8+, Chrome 41.0-44, Firefox 30.0-51, Safari 8.0-11 Plug-in free live view: Chrome 45.0+, Firefox 52.0+
Interface	
Communication Interface	1 RJ45 10M/100M self-adaptive Ethernet port
Audio (-S)	1 audio input (line in), 1 audio output interface, terminal block
Alarm (-S)	1 alarm input, 1 alarm output (max. 12 VDC, 30 mA), terminal block
On-board Storage	Built-in microSD/SDHC/SDXC slot, up to 128 GB
Reset Button	Yes
Smart Feature-set	
Behavior Analysis	Line crossing detection, intrusion detection, unattended baggage detection, object removal detection
Exception Detection	Scene change detection
Face Detection	Yes
General	
Operating Conditions	-30 °C to +60 °C (-22 °F to +140 °F), Humidity 95% or less (non-condensing)
Power Supply	12 VDC ± 25%, 5 W PoE (802.3af, 36 V to 57 V, class 3), 6.5 W
IR Range	Up to 30 m
Protection Level	IP67, IK10
Material	Camera body: metal, bubble: plastic
Dimensions	Camera: Φ 111 × 82.4 mm (Φ 4.4″ × 3.2″) Package: 134 × 134 × 108 mm (5.27″ × 5.27″ × 4.25″)
Weight	Camera: 500 g (1.1 lb.)

Available Model

DS-2CD2125FWD-I (2.8/4/6/8/12 mm), DS-2CD2125FWD-IS (2.8/4/6/8/12 mm)

Dimension

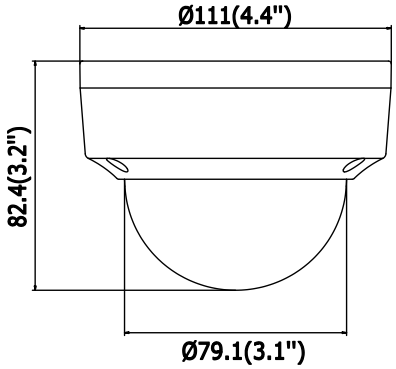

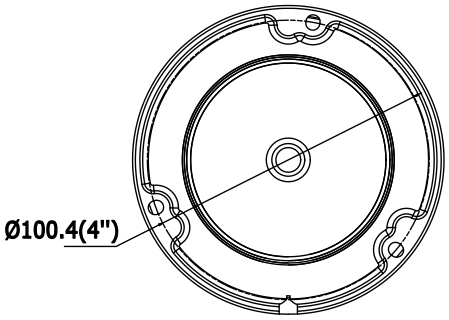

Unit: mm

Accessory

Inclined Ceiling Mount
DS-1259ZJ

Wall Mount
DS-1272ZJ-110

Wall Mount + Junction Box
DS-1272ZJ-110B

Pendant Mount
DS-1271ZJ-110

Junction Box
DS-1280ZJ-DM18

Corner Mount
DS-1276ZJ-SUS

Vertical Pole Mount
DS-1275ZJ-SUS

Rain-proof Cap
DS-1250ZJ

Wall Mount
DS-1258ZJ

Inclined Ceiling Mount
DS-1259ZJ(Black)

Pendant Mount
DS-1271ZJ-110(Black)

Wall Mount
DS-1272ZJ-110(Black)

Corner Mount
DS-1276ZJ-SUS(Black)

Junction Box
DS-1280ZJ-DM18(Black)

Wall Mount
DS-1258ZJ(Black)

Vertical Pole Mount
DS-1275ZJ-SUS(Black)

Distributed by

Headquarters
No.555 Qianmo Road, Binjiang District,
Hangzhou 310051, China
T +86-571-8807-5998
overseasbusiness@hikvision.com

Hikvision USA
T +1-909-895-0400
sales.usa@hikvision.com

Hikvision Europe
T +31-23-55-42-770
info.eu@hikvision.com

Hikvision Middle East
T +971-4-8816086
salesme@hikvision.com

Hikvision Russia
T +7-495-669-67-99
saleru@hikvision.com

Hikvision India
T +91-22-28469900
sales@pramahikvision.com

Hikvision Italy
T +39-0438-6902
info.it@hikvision.com

Hikvision France
T +33(0)1-85-330-450
info.fr@hikvision.com

Hikvision Spain
T +34-91-737-16-55
info.es@hikvision.com

Hikvision Poland
T +48-22-460-01-50
poland@hikvision.com

Hikvision UK
T +01628-902140
support.uk@hikvision.com

Hikvision Singapore
T +65-6684-4718
sg@hikvision.com

Hikvision Oceania
T +61-2-8599-4233
salesau@hikvision.com

Hikvision Canada
T +1-909-895-0400
sales.usa@hikvision.com

Hikvision Korea
T +82-31-731-8841
sales.korea@hikvision.com

Hikvision Brazil
T +55 11 3318-0050
Latam.support@hikvision.com

Hikvision Africa
T +27 (10) 0351172
sale.africa@hikvision.com

Hikvision Hong Kong
T +852-2151-1761

© Hikvision Digital Technology Co., Ltd. 2019 | Data subject to change without notice |

05058020190523